Model Number:

MMP BL58-412F-36V GP52-139

MOTOR LEADS	
LEAD	COLOR
M1	RED
M2	BLACK
M3	WHITE

HALL LEADS	
LEAD	COLOR
H1	BLUE
H2	GREY
H3	VIOLET
VCC	RED
GND	BLACK

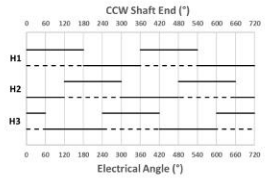

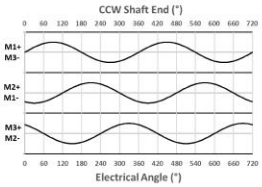

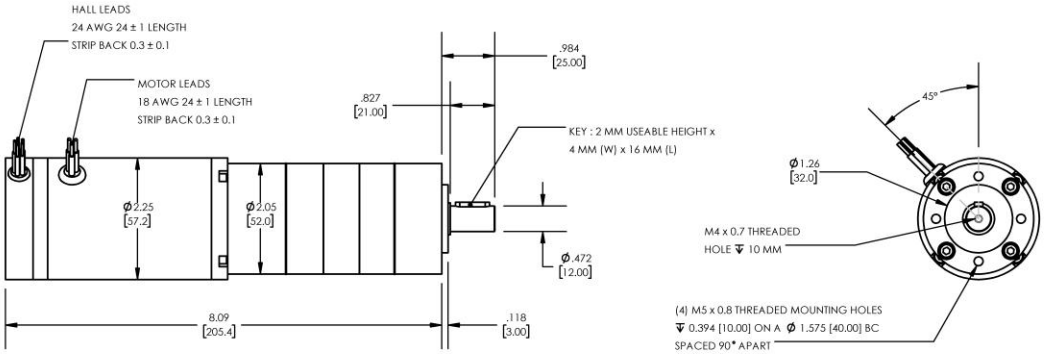

DIMENSIONS ARE INCHES [MM] UNLESS OTHERWISE STATED

PLANETARY GEARMOTOR OUTPUT PARAMETERS:	VALUE	UNITS	TOLERANCE
Gearhead Ratio (exact)	139.13 : 1		
Gearhead Shaft Output Speed (at full-load)	24	RPM	MAX
Gearmotor Rated Continuous Torque	443	In-Lbs	MAX
Gearmotor Rated Peak Torque	443++	In-Lbs	-----
Gearhead Standard Backlash	48	Arc Minutes	MAX
Gearhead Efficiency	70%	-----	-----
Output Shaft Radial Load Capacity	102	Lbs	MAX
Output Shaft Axial Load Capacity	34	Lbs	MAX
Gearmotor Total Weight	3.9	Lbs	MAX

++ All Peak Torque values are dependent upon duty. Contact our sales office for details.

DC MOTOR PERFORMANCE PARAMETERS:	VALUE	UNITS	TOLERANCE
Rated DC Voltage	36	DC VOLTS	-----
Rated Continuous Current	7.46	AMPERES	-----
No-Load Speed	4675	RPM	MAX
Rated Speed	3401	RPM	+/- 15%
Rated Continuous Power Out	183	WATTS	+/- 15%
Rated Continuous Torque	73	OZ-IN	-----
Peak Torque (motor only)	190	OZ-IN	-----
No-Load Current	0.45	AMPERES	MAX
Back EMF Constant (Ke)	7.7	V/KRPM	+/- 10%
Torque Constant (Kt)	10.4	OZ-IN/AMP	+/- 10%
DC Armature Resistance	1.32	OHMS	+/- 15%
Armature Inductance	0.93	mH	+/- 15%
Armature temperature	155	DEG. C	MAX

NOTES:

- ENCODER & BRAKE OPTIONS AVAILABLE – FOLLOW THIS LINK FOR DETAILS
- NEMA MOUNTING FLANGE OPTION AVAILABLE – FOLLOW THIS LINK FOR DETAILS